LAMPIRAN C-4

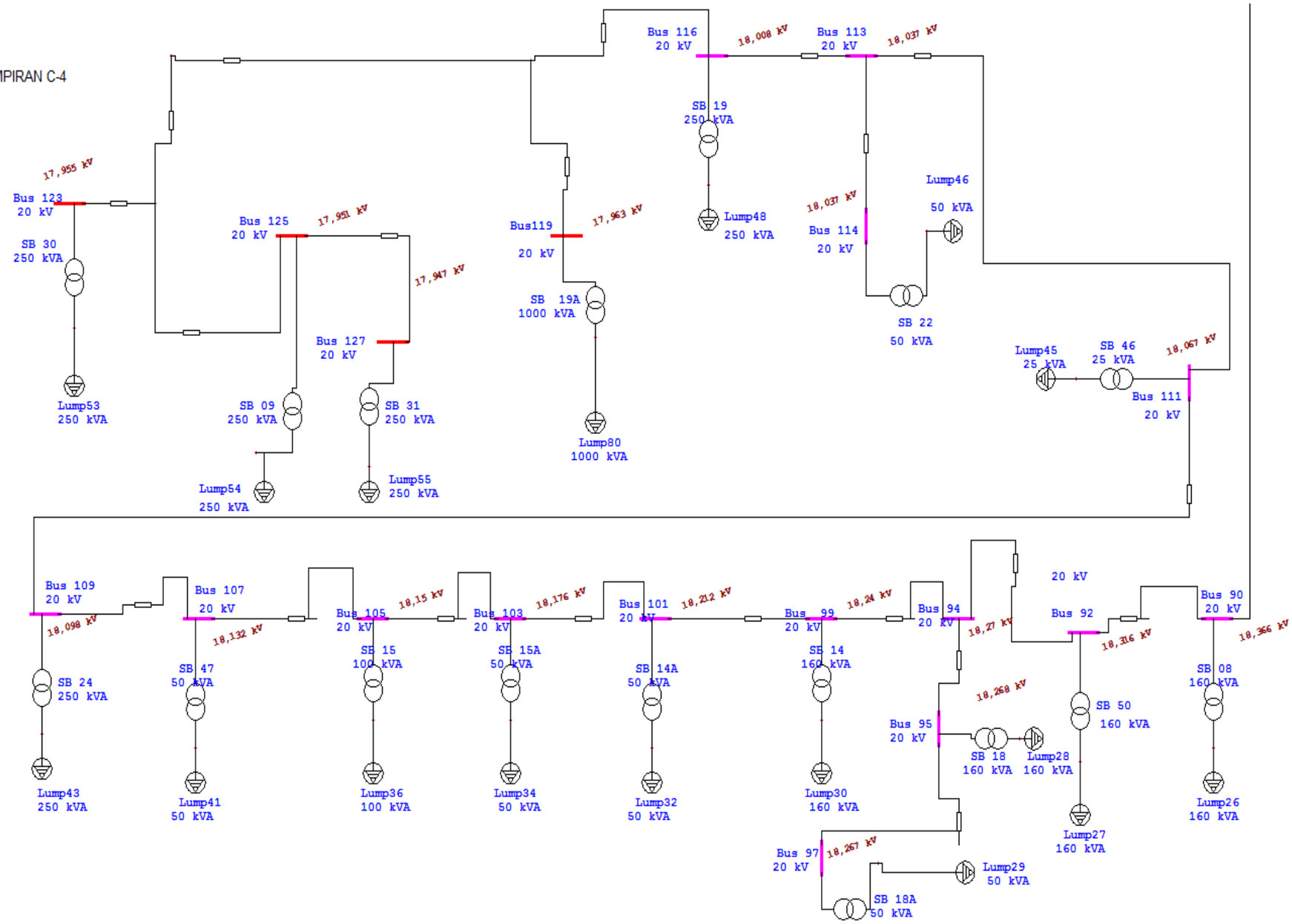
Bus 116
20 kV
18,008 kV
Bus 113
20 kV
18,037 kV
SB 19
250 kVA
Lump48
250 kVA
Lump46
50 kVA
18,037 kV
Bus 114
20 kV
SB 22
50 kVA
17,955 kV
Bus 123
20 kV
SB 30
250 kVA
Lump53
250 kVA
Bus 125
20 kV
17,951 kV
17,947 kV
Bus 127
20 kV
SB 09
250 kVA
Lump54
250 kVA
SB 31
250 kVA
Lump55
250 kVA
Bus119
20 kV
17,963 kV
SB 19A
1000 kVA
Lump80
1000 kVA
Lump45
25 kVA
SB 46
25 kVA
18,067 kV
Bus 111
20 kV
Bus 109
20 kV
18,098 kV
SB 24
250 kVA
Lump43
250 kVA
Bus 107
20 kV
18,132 kV
SB 47
50 kVA
Lump41
50 kVA
Bus 105
20 kV
18,15 kV
SB 15
100 kVA
Lump36
100 kVA
Bus 103
20 kV
18,176 kV
SB 15A
50 kVA
Lump34
50 kVA
Bus 101
20 kV
18,212 kV
SB 14A
50 kVA
Lump32
50 kVA
Bus 99
20 kV
18,24 kV
SB 14
160 kVA
Lump30
160 kVA
Bus 94
20 kV
18,27 kV
20 kV
Bus 92
18,316 kV
SB 50
160 kVA
Lump27
160 kVA
Bus 90
20 kV
18,366 kV
SB 08
160 kVA
Lump26
160 kVA
18,268 kV
Bus 95
20 kV
SB 18
160 kVA
Lump28
160 kVA
Bus 97
20 kV
18,267 kV
Lump29
50 kVA
SB 18A
50 kVA