LAMPIRAN C-1

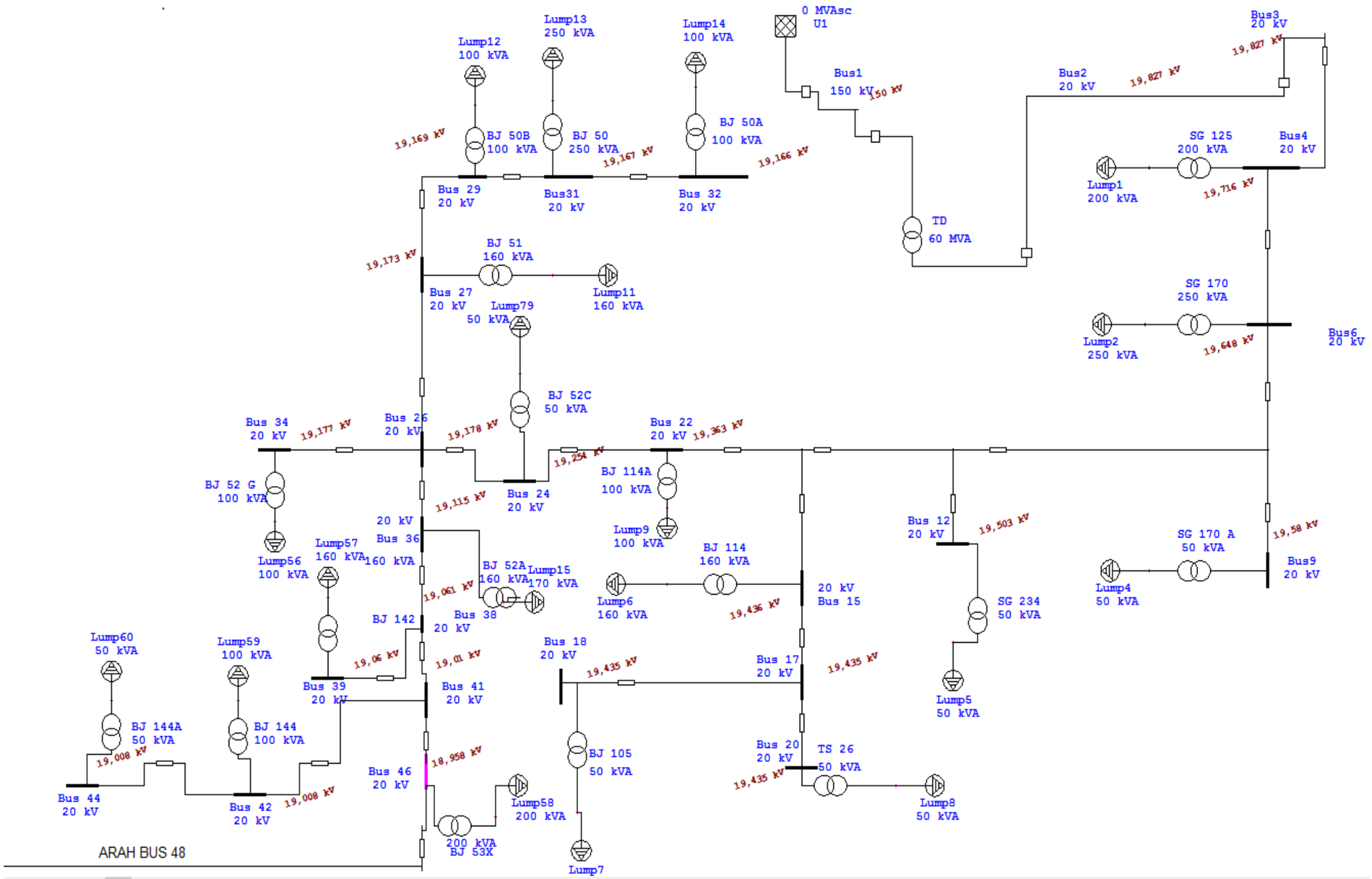
0 MVAsc
U1
Bus1
150 kV
150 kV
Bus2
20 kV
19,827 kV
Bus3
20 kV
19,827 kV
Bus4
20 kV
Lump12
100 kVA
Lump13
250 kVA
Lump14
100 kVA
BJ 50B
100 kVA
BJ 50
250 kVA
BJ 50A
100 kVA
19,169 kV
19,167 kV
19,166 kV
Bus 29
20 kV
Bus31
20 kV
Bus 32
20 kV
SG 125
200 kVA
Lump1
200 kVA
19,716 kV
TD
60 MVA
BJ 51
160 kVA
19,173 kV
Bus 27
20 kV
Lump11
160 kVA
Lump79
50 kVA
SG 170
250 kVA
Lump2
250 kVA
19,648 kV
Bus6
20 kV
BJ 52C
50 kVA
Bus 34
20 kV
19,177 kV
Bus 26
20 kV
19,178 kV
Bus 22
20 kV
19,363 kV
19,254 kV
BJ 114A
100 kVA
BJ 52 G
100 kVA
Bus 24
20 kV
19,115 kV
20 kV
Bus 36
160 kVA
Lump9
100 kVA
Lump56
100 kVA
Lump57
160 kVA
BJ 52A
160 kVA
Lump15
170 kVA
BJ 114
160 kVA
Bus 12
20 kV
19,503 kV
SG 170 A
50 kVA
19,58 kV
Bus9
20 kV
Lump4
50 kVA
Lump6
160 kVA
19,061 kV
Bus 38
20 kV
19,436 kV
20 kV
Bus 15
SG 234
50 kVA
BJ 142
Lump60
50 kVA
Lump59
100 kVA
19,06 kV
19,01 kV
Bus 18
20 kV
19,435 kV
Bus 17
20 kV
19,435 kV
Bus 39
20 kV
Bus 41
20 kV
Lump5
50 kVA
BJ 144A
50 kVA
BJ 144
100 kVA
19,008 kV
BJ 105
50 kVA
Bus 20
20 kV
TS 26
50 kVA
19,435 kV
Bus 46
20 kV
18,958 kV
Bus 44
20 kV
Bus 42
20 kV
19,008 kV
Lump58
200 kVA
Lump8
50 kVA
200 kVA
BJ 53X
Lump7
ARAH BUS 48